D1RFRD006

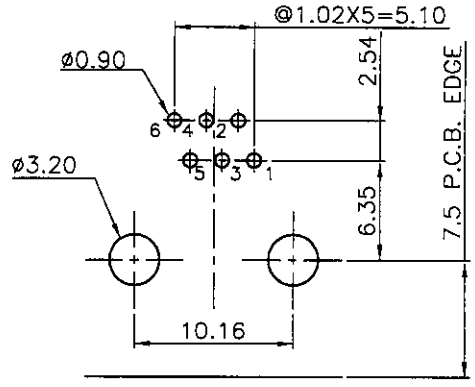

PC Board Layout t=1.60mm

Component Side Shown

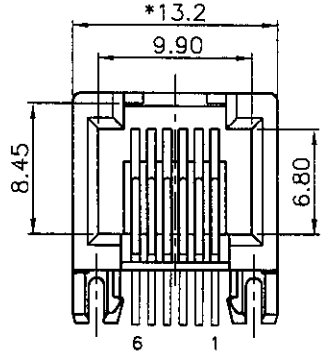

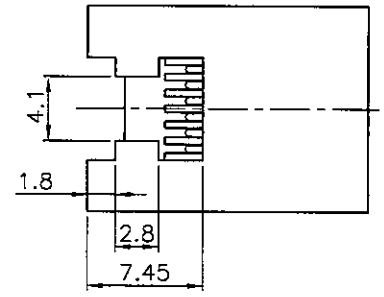

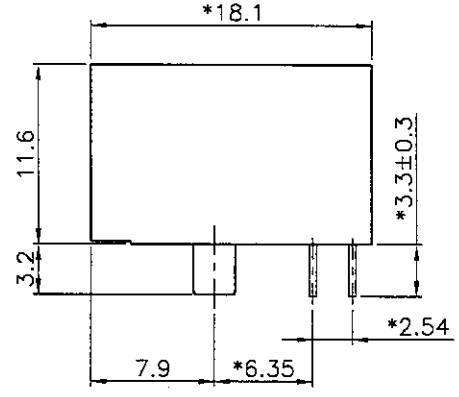

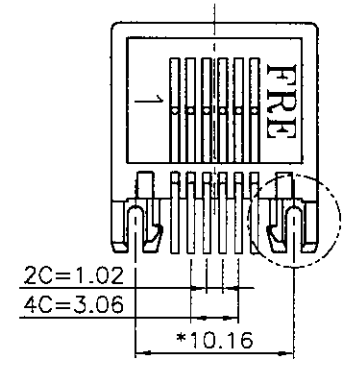

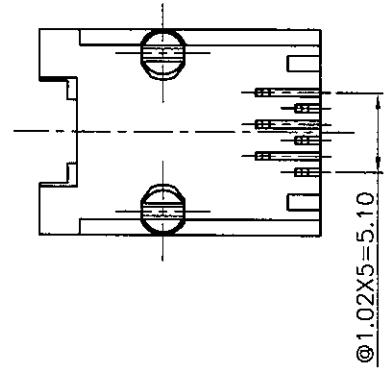

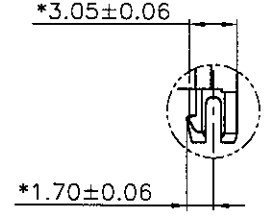

NOTES:

ELECTRICAL:

1. VOLTAGE RATING : 150 VAC RMS.
2. CURRENT RATING : 1.5 AMP.
3. CONTACT RESISTANCE : 30 MILLIOHMS MAX.
4. INSULATION RESISTANCE: 1000 MEGOHMS MIN @ 500 VDC.
5. DIELECTRIC STRENGTH : 1000 VAC RMS 60Hz, 1MIN.

MECHANICAL:

1. HOUSING MATERIAL : FR50&PBT+30% .G.F UL94V-0.
2. CONTACT MATERIAL : PHOSPHOR BRONZE ø0.46mm.
3. PLATING : GOLD PLATING OVER NICKEL.
4. OPERATING LIFE : 750 CYCLES MIN.
5. PCB RETENTION PRE-SOLDER : 1 LB MIN.
6. PCB RETENTION POST-SOLDER: 10 LBS MIN.

ENVIRONMENTAL:

1. STORAGE : -40°C TO +85°C.
2. OPERATION :-40°C TO +85°C.
3. WAVE SOLDERING TEMPERRATURE: 230~250°C (5~10 SECONDS)

MATES WITH MODULAR PLUG CONFORMING TO
FCC PART 68, SUBPART F.
CUL FILE NO. E163191

ROHS PART NUMBER:E536X-300XXX-L

2- 2C
4- 4C
6- 6C

1- 3u" 2- 6u" 3-15u"
4-30u" 5-50u"

MATERIAL OF HS'G :
0G-PBT BK.
4G-FR50 BK
⚠ JG-PBT+30%.G.F WHITE (PBT NATURAL COLOR)
⚠ AG-PBT+30%.G.F. PANTON RED 186C
⚠ 6G-PBT+30%.G.F. PANTON GREEN 7479C
⚠ EH-PBT+30%.G.F. PANTON YELLOW 114C

REVISION RECORD

REV	ECO	DESCRIPTION	DRFT	CHKD
1		ADD P/N	CHJM 10/17/05	
2		ADD P/N	HERO 11/21/05	
3		ADD P/N	JMAYIN 1/18/06	
4		ADD P/N	ANKUE 05/29/06	

MM (INCH)	DFTO CXQ	DATE 04/12/05	FULL RISE ELECTRONIC CO., LTD
TOLERANCES EXCEPT AS NOTED	CHKD	DATE	TITLE
MM .0 ±0.2 ± .00 ±0.15 ± .000 ±0.075 ±	MFO	DATE	11.5mm SIDE PCB JACK 6P
ANGLES ± 0.5	APPV	DATE	DRAWING NO. GE533022-LC / PART NO. SEE NOTE
THIRD ANGLE PROJECTION	MATERIAL :		SIZE A3 REV 4
DETACHED LISTS	QT'Y :		DO NOT SCALE DRAWING
	FINISH :		SHEET 1 OF 1
	SCALE : 3 : 1		