San Technology, Inc.

SPECIFICATION
FOR
LCD Module

Customer P/N:

Santek P/N: ST0154G3W-RSLW-C

DOC. Revision: RS01

Customer Approval:

	SIGNATURE	DATE
PREPARED BY	Zhiyi Liao	2017-06-20
CHECKED BY	Sam & Tom	2017-06-20
APPROVED BY	Natty Lee	2017-Nov-20

Document Revision History

Version	Revise Date	Description	Changed by
RS01	2017-06-20	Initial release	Zhiyi Liao

Table of Contents

1. General Description

- 1.54”(diagonal), 240x 240 dots, 16M colors, Transmissive, TFT LCD module.
- Viewing Direction: ALL.
- Driving IC: ST7789V
- SPI 8Bit system interface
- Logic voltage: 2.7-3.6V (typ.).
-

2. Mechanical Specifications

The mechanical detail is shown in Fig. 1 and summarized in Table 1 below.

Table 1

Parameter		Specifications	Unit
Outline dimensions		31.52 (W) x 35.00H) x 2.1(D)	mm
	LCD active area	27.72(W) x 27.72(H)	mm
	Display format	240 x 240	dots
	Color configuration	Delta RGB type	-
	Dot pitch	0.1155 (W) x 0.1155(H)	mm

Figure 1: Outline Drawing

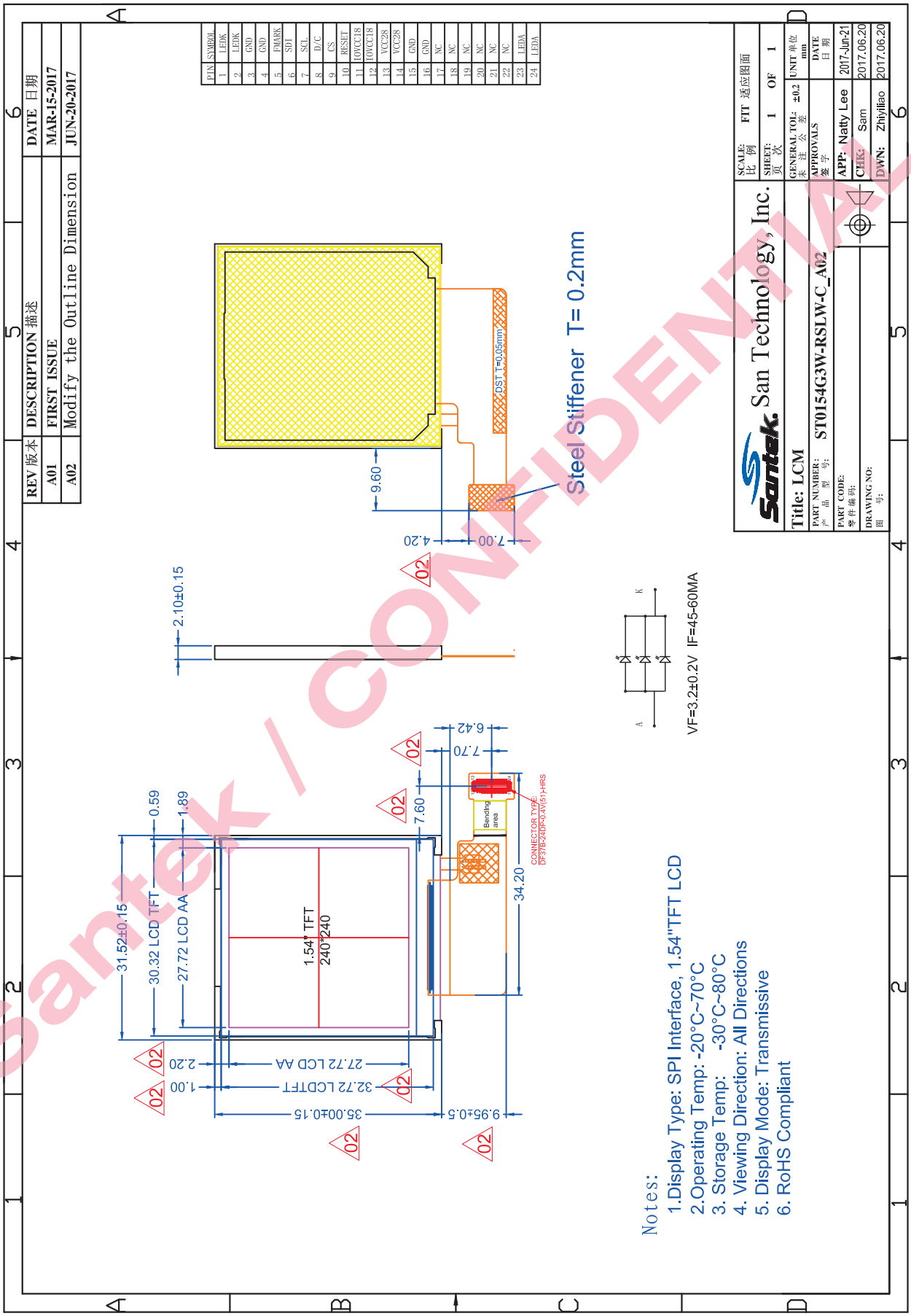

3. Interface signals

No.	Symbol	Description
1	LEDK	Backlight LED Cathode
2	LEDK	Backlight LED Cathode
3	GND	Ground
4	GND	Ground
5	FMARK	Tearing effect signal
6	SDI	Serial input signal
7	SCL	Clock signal
8	D/C	Display data/command selection pin
9	CS	Chip select
10	RESET	Reset signal
11	IOVCC	Power Supply for I/O System
12	IOVCC	Power Supply for I/O System
13	VCC	Power Supply for Analog
14	VCC	Power Supply for Analog
15	GND	Ground
16	GND	Ground
17-22	NC	No connection
23	LEDA	Backlight LED Anode
24	LEDA	Backlight LED Anode

4. Absolute Maximum Ratings

4.1 Electrical Maximum Ratings – for IC Only

Table 3: Electrical Maximum Ratings – for IC

Parameter	Symbol	Min.	Max.	Unit	Note
Power supply voltage	VCC	-0.3	+3.6	V	1

Note:

1. VCC, GND must be maintained.
2. The modules may be destroyed if they are used beyond the absolute maximum ratings.

4.2 Environmental Condition

Table 4

Item	Operating temperature (Topr)		Storage temperature (TSgt) (Note 1)		Remark
	Min.	Max.	Min.	Max.	
Ambient temperature	-20°C	+70°C	-30°C	+80°C	Dry
Humidity (Note 1)	80% max. RH for Ta 40℃ < 50% RH for 40℃ < Ta Maximum operating temperature				No condensation

Note 1: Product cannot sustain at extreme storage conditions for long time.

4.3 LED Driving Conditions

Item	Symbol	MIN	TYP	MAX	Unit	Remark
Forward Current	I_F	-	60	-	mA	
Forward Voltage	V_F	3.0	3.2	3.4	V	
Backlight Power consumption	W_{BL}	-	0.192	-	W	
LED Lifetime		-	25000	-	Hrs	

Note 1: Each LED: IF =20 mA, VF =3.2+/0.2V.

Note 2: Optical performance should be evaluated at Ta=25℃ only.

Note 3: If LED is driven by high current, high ambient temperature & humidity condition. The life Time of LED will be reduced. Operating life means brightness goes down to 50% initial brightness. Typical operating life time is estimated data.

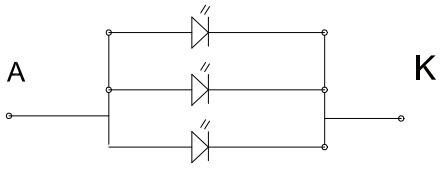

VF=3.2±0.2V IF=45-60MA

5. Electrical Specifications

Typical Electrical Characteristics

At Ta = 25 °C, VCC=IOVCC= 2.7V to 3.6V, GND=0V.

Table 5

Parameter	Symbol	Conditions	Min.	Typ.	Max.	Unit
Supply voltage (logic)	VDD-GND		2.8	3.0	3.3	V
Supply current (Logic & LCD)	ICC	VDD=3.0V	-	-	10	mA
Supply voltage of white LED backlight	VLED =V(BL+)-V(BL-)	Forward current =60 mA Number of LED dies =3	3.0	3.2	3.4	V
Uniformity	△	IF=60mA	75	80	-	%
Luminance (on the module surface,BM-7)	LV	IF=60mA	400	450	-	cd/m2

6. Optical Characteristics

Table 7: Optical specifications

(Note1，Note2)(Using CPT LC+Polarizer+Corresponding Backlight, reference only)

Item		Symbol		Conditions	Min.	Typ.	Max.	Unit	Remark
Transmittance (With Polarizer)	HC/APCF	T		$\theta = \phi = 0$	6.1	6.7	--	%	
Contrast Ratio		CR			700	1000	--		Note 3
Response Time		Tr+Tf		$\theta = \phi = 0°$	--	30	40	ms	Note 4
Viewing angle	Vertical	U	θ*2	CR≧10	75	85	--	degree	Note 5
		D			75	85	--	degree	
	Horizontal	L	ϕ*2		75	85	--	degree	
		R			75	85	--	degree	
Color Filter Chromacicity	W	x		$\theta = \phi = 0°$	0.275	0.295	0.315		Note 6
		y			0.314	0.334	0.354		
	R	x			0.611	0.631	0.651		
		y			0.292	0.312	0.332		
	G	x			0.275	0.295	0.315		
		y			0.517	0.537	0.557		
	B	x			0.117	0.137	0.157		
		y			0.131	0.151	0.171		
	NTSC					50		%	

Note 1. Ambient condition：25℃±2℃，60±10%RH，under 10 Lunx in the darkroom。

Note 2. Measure device：BM-5A (TOPCON)，viewing cone = 1°，I_L= 20mA。

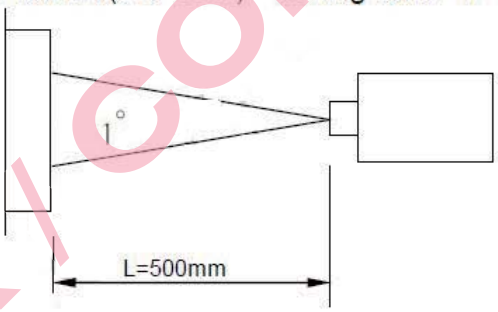

Note 3. Definition of Contrast Ratio：
CR = White Luminance (ON) / Black Luminance (OFF)

Note 4. Definition of response time：The response time is defined as the time interval between the 10% and 90% amplitudes.

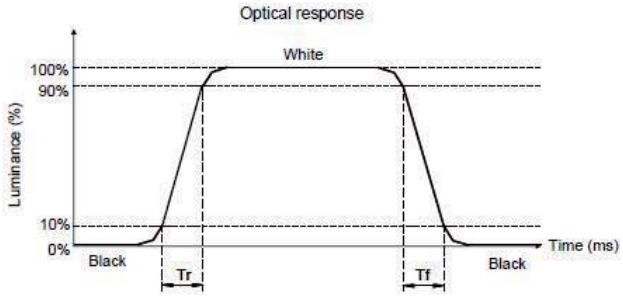

Note 5. Definition of view angle(θ，ψ)：

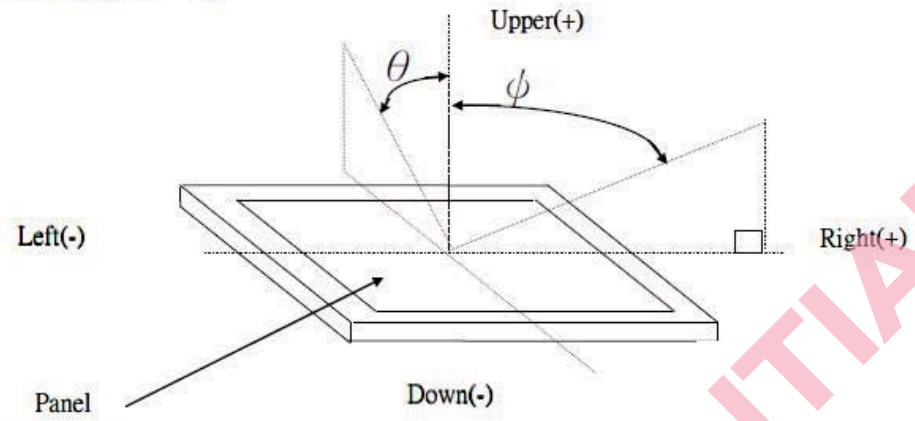

Note 6. Light source：C light.

7. Timing Characteristics

7.1 Serial Interface

IM3	IM2	IM1	IM0	Interface	Read back selection
0	1	0	1	3-line serial interface Ⅰ	Via the read instruction (8-bit, 24-bit and 32-bit read parameter)
0	1	1	0	4-line serial interface Ⅰ	
1	1	0	1	3-line serial interface Ⅱ	
1	1	1	0	4-line serial interface Ⅱ	

Table 12 Selection of serial interface

The serial interface is either 3-lines/9-bits or 4-lines/8-bits bi-directional interface for communication between the micro controller and the LCD driver. The 3-lines serial interface use: CSX (chip enable), SCL (serial clock) and SDA (serial data input/output), and the 4-lines serial interface use: CSX (chip enable), D/CX (data/ command flag), SCL (serial clock) and SDA (serial data input/output). Serial clock (SCL) is used for interface with MCU only, so it can be stopped when no communication is necessary.

Pin description

3-line serial interface Ⅰ

Pin Name	Description
CSX	Chip selection signal
DCX	Clock signal
SDA	Serial input/output data

4-line serial interface Ⅰ

Pin Name	Description
CSX	Chip selection signal
WRX	Data is regarded as a command when WRX is low Data is regarded as a parameter or data when WRX is high
DCX	Clock signal
SDA	Serial input/output data

3-line serial interface Ⅱ

Pin Name	Description
CSX	Chip selection signal
DCX	Clock signal
SDA	Serial input data
SDO	Serial output data

4-line serial interface Ⅱ

Pin Name	Description
CSX	Chip selection signal
WRX	Data is regarded as a command when WRX is low Data is regarded as a parameter or data when WRX is high

DCX	Clock signal
SDA	Serial input data
SDO	Serial output data

Table 13 pin description of serial interface

Command write mode

The write mode of the interface means the micro controller writes commands and data to the LCD driver. 3-lines serial data packet contains a control bit D/CX and a transmission byte. In 4-lines serial interface, data packet contains just transmission byte and control bit D/CX is transferred by the D/CX pin. If D/CX is "low", the transmission byte is interpreted as a command byte. If D/CX is "high", the transmission byte is stored in the display data RAM (memory write command), or command register as parameter.

Any instruction can be sent in any order to the driver. The MSB is transmitted first. The serial interface is initialized when CSX is high. In this state, SCL clock pulse or SDA data have no effect. A falling edge on CSX enables the serial interface and indicates the start of data transmission.

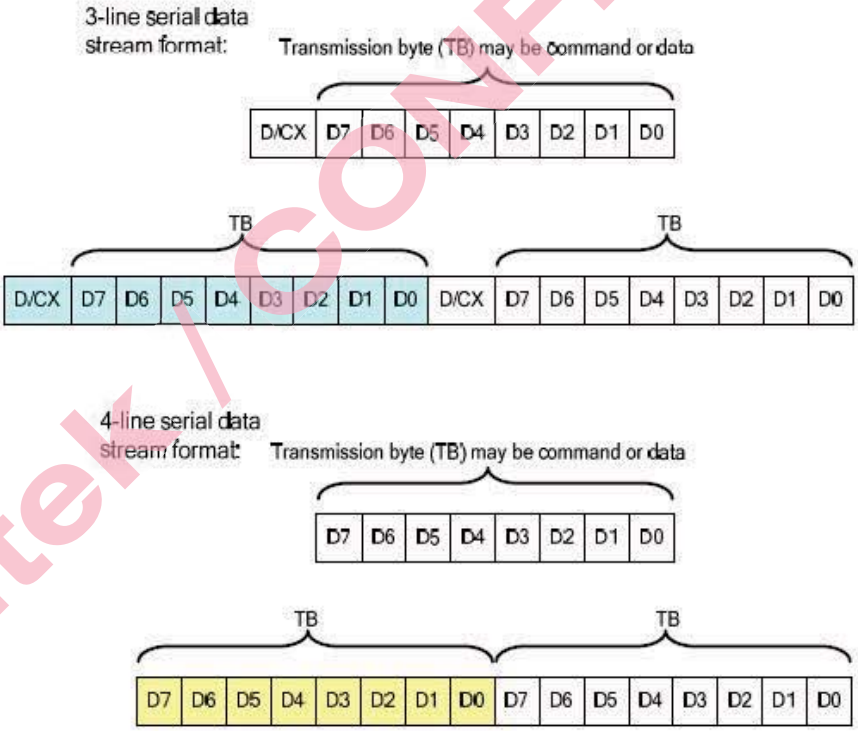

Figure 12 Serial interface data stream format

When CSX is "high", SCL clock is ignored. During the high period of CSX the serial interface is initialized. At the falling edge of CSX, SCL can be high or low. SDA is sampled at the rising edge of SCL. D/CX indicates whether the byte is command (D/CX='0') or parameter/RAM data (D/CX='1'). D/CX is sampled when first rising edge of SCL (3-line serial interface) or 8th rising edge of SCL (4-line serial interface). If CSX stays low after the last bit of command/data byte, the serial interface expects the D/CX bit (3-line serial interface) or D7

(4-line serial interface) of the next byte at the next rising edge of SCL..

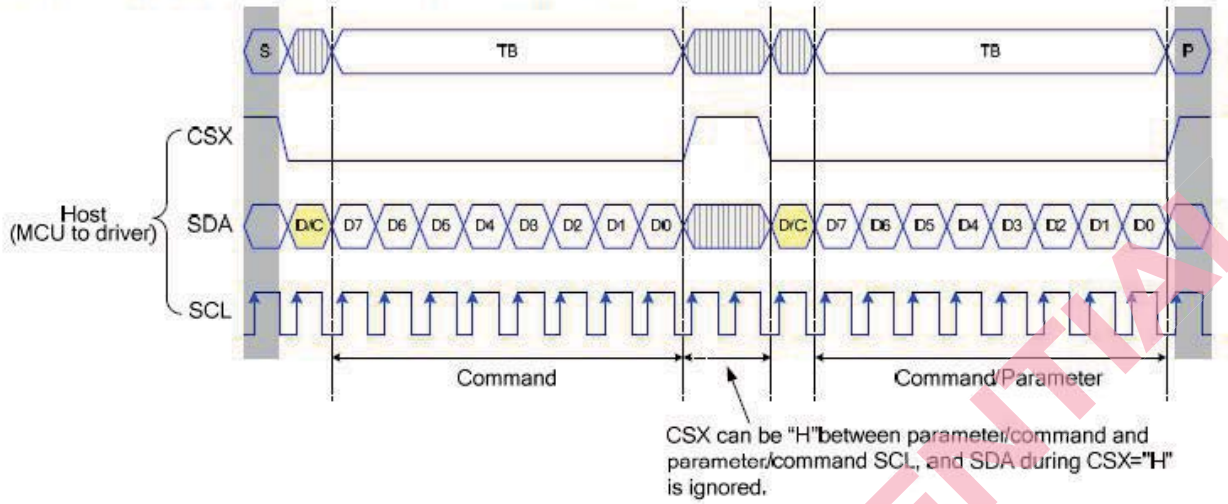

Figure 13 3-line serial interface write protocol (write to register with control bit in transmission)

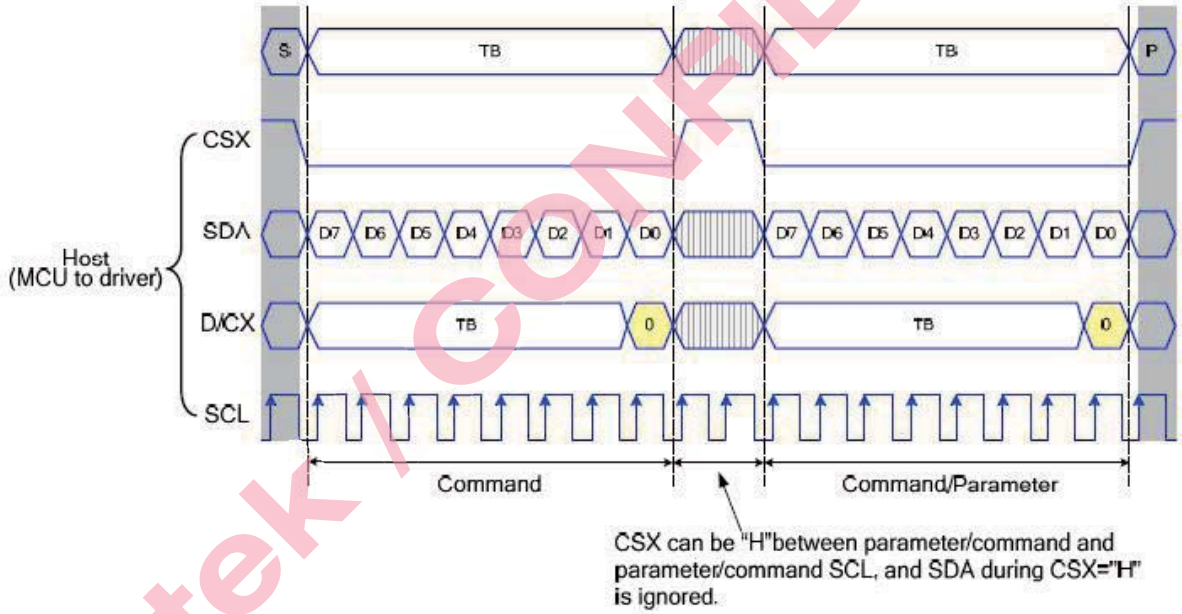

7.2 Serial Interface Characteristtics(4-line serial)

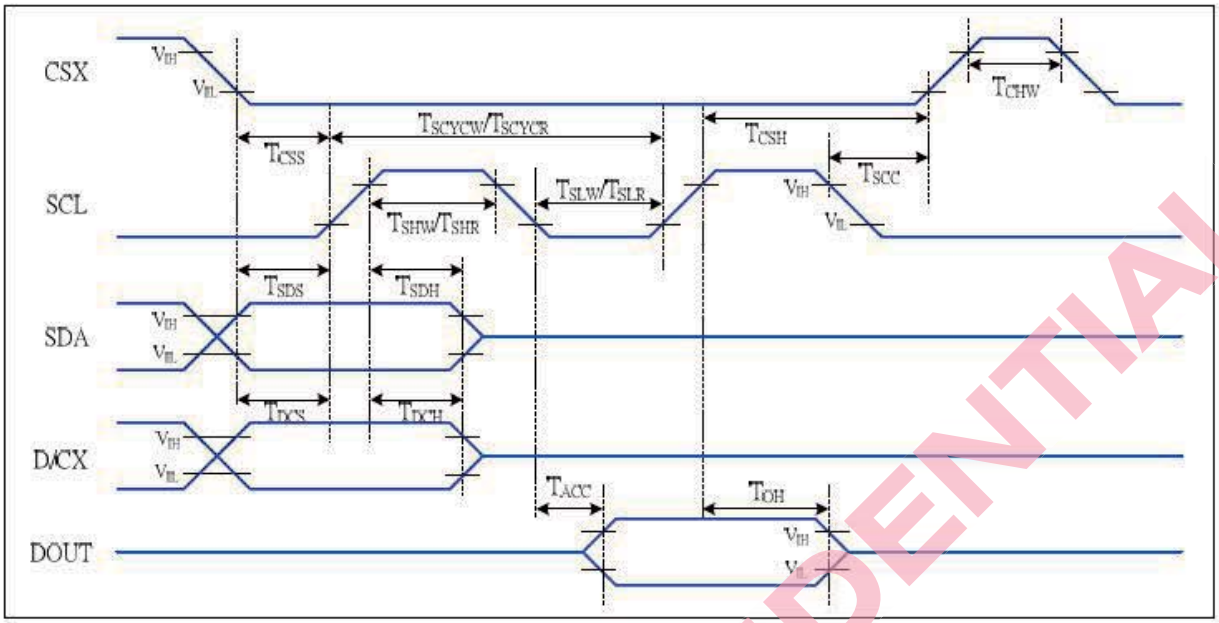

Figure 5 4-line serial Interface Timing Characteristics

VDDI=1.65 to 3.3V, VDD=2.4 to 3.3V, AGND=DGND=0V, Ta=-30 to 70 ℃

Signal	Symbol	Parameter	MIN	MAX	Unit	Description
CSX	T_{CSS}	Chip select setup time (write)	15		ns	
	T_{CSH}	Chip select hold time (write)	15		ns	
	T_{CSS}	Chip select setup time (read)	60		ns	
	T_{SCC}	Chip select hold time (read)	65		ns	
	T_{CHW}	Chip select "H" pulse width	40		ns	
SCL	T_{SCYCW}	Serial clock cycle (Write)	66		ns	-write command & data ram
	T_{SHW}	SCL "H" pulse width (Write)	15		ns	
	T_{SLW}	SCL "L" pulse width (Write)	15		ns	
	T_{SCYCR}	Serial clock cycle (Read)	150		ns	-read command & data ram
	T_{SHR}	SCL "H" pulse width (Read)	60		ns	
	T_{SLR}	SCL "L" pulse width (Read)	60		ns	
D/CX	T_{DCS}	D/CX setup time	10		ns	
	T_{DCH}	D/CX hold time	10		ns	
SDA (DIN)	T_{SDS}	Data setup time	10		ns	
	T_{SDH}	Data hold time	10		ns	
DOUT	T_{ACC}	Access time	10	50	ns	For maximum CL=30pF
	T_{OH}	Output disable time	15	50	ns	For minimum CL=8pF

8. Reliability Test Item

Test Item	Sample Type	Test Condition	Test result determinant gist
High temperature storage	Normal temperature	70±3℃;96H	the inspection of appearance and function character.
	Wide temperature	80±3℃;96H	
Low temperature storage	Normal temperature	-20±3℃;120H	
	Wide temperature	-30±3℃;120H	
High temperature /humidity storage	Normal temperature	50℃±3℃,90%±3%RH;96H	
	Wide temperature	60℃±3℃,90%±3%RH;96H	
High temperature operation	Normal temperature	60±3℃;96H	No objection of the function character; no fatal objection of the appearance.
	Wide temperature	70±3℃;96H	
Low temperature operation	Normal temperature	0±3℃;96H	
	Wide temperature	-20±3℃;96H	
High temperature /humidity operation	Normal temperature	40℃±3℃,90%±3%RH;96H	
	Wide temperature	50℃±3℃,90%±3%RH;96H	
Temperature Shock	Normal temperature	-20±3℃,30min→70±3℃,30 min;10cycle	inspect the objections appearance、function & the whole structure
	Wide temperature	-30±3℃,30min 80±3,30min;10cycle	The inspection of appearance、function & the whole structure

9. Inspection Criteria

9.1. Scope

The incoming inspection standards shall be applied to TFT –LCD Modules(hereinafter called "Modules") that supplied by San Technology,Inc.

9.2. Incoming Inspection

The customer shall inspect the modules within thirth calendar days of the delivery date（t he “inspection period）a t its own cost. The result of the inspection （a cceptance or rejection）s hall be recorded in writing,and a copy of this writing will be promptly sent to the seller, If the results of the inspecting from buyer does not send to the seller within thirth calendar days of the delivery date. The modules shall be regards as acceptance. Should the customer fail to notify the seller within the inspection period, the buyers right to reject the modules. Shall be lapsed and the modules shall be deemed to have been accepted by the buyer.

9.3 Inspection Sampling Method

9.3.1. Lot size: Quantity per shipment lot per model

9.3.2. Sampling type: Normal inspection, Single sampling

9.3.3. Inspection level: II

9.3.4. Sampling table: GB/T2828.1-2003

9.3.5. Acceptable quality level （AQL）

Major defect: AQL=0.65

Minor defect: AQL=1.00

9.4 Inspection Conditions:

9.4.1 Ambient conditions:

a. Temperature: Room temperature 25±5℃

b. Humidity: (60±10) ％RH

c. Illumination: Single fluorescent lamp non-directive (300 to 700 Lux)

9.4.2 Viewing distance

The distance between the LCD and the inspector’s eyes shall be at least 35~40㎝.

9.4.3 Viewing Angle

U/D: 45º/45º, L/R: 45º/45º

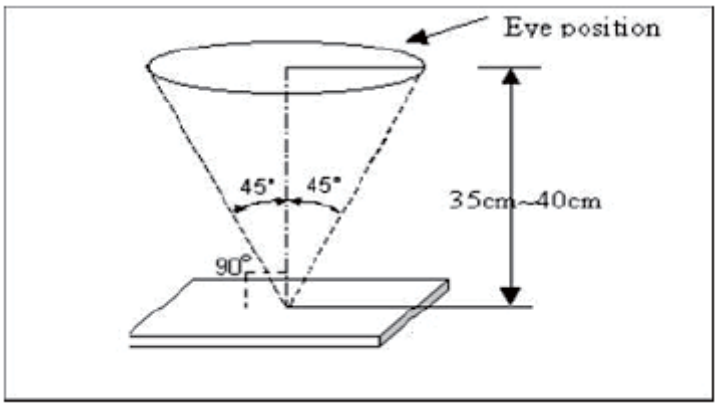

9.5 Defects are classified as major defects and minor defects according to the degree of defectiveness defined herein.

No	Item	Criterion for defects	Defect type
1	Black/white spot defect (in displaying)	black/white spot definition Φ= (x+y)/2 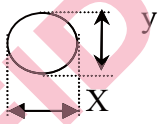 1. black/white spot defect (≤4.0inch) area size（mm）: Φ≤0.1 — ignore; 0.1＜Φ≤0.15 — 3; 0.15＜Φ≤0.25 — 2; Φ＞0.25 — 0 Acceptable number A, B, C: ignore 2. black/white spot defect (>4.0inch) area size（mm）: Φ≤0.15 — ignore; 0.15＜Φ≤0.25 — 2; 0.25＜Φ≤0.35 — 1; Φ＞0.35 — 0 Acceptable number A, B, C: ignore	Minor

<table>
<tr><td rowspan="5">2</td><td rowspan="5">Black/white line defect (in displaying)</td><td>1. black/white line defect (All inch)
<table>
<tr><th colspan="2">size（mm）</th><th colspan="3">Acceptable number</th></tr>
<tr><th rowspan="2">L(length)</th><th rowspan="2">W(width)</th><th colspan="3">area</th></tr>
<tr><th>A</th><th>B</th><th>C</th></tr>
<tr><td>10＜L</td><td>0.03＜ W≤0.04</td><td colspan="2">5</td><td rowspan="4">ignore</td></tr>
<tr><td>5.0＜ L≤10</td><td>0.04＜ W≤0.06</td><td colspan="2">3</td></tr>
<tr><td>1.0＜ L≤5.0</td><td>0.06＜ W≤0.07</td><td colspan="2">2</td></tr>
<tr><td>L≤1.0</td><td>0.07＜ W≤0.09</td><td colspan="2">1</td></tr>
</table></td><td>Minor</td></tr>
</table>

<table>
<tr><td rowspan="1">3</td><td>Blemish & foreign matters</td><td>
1. Dot (≤4.0inch LCD)
<table>
<tr><td rowspan="3">size(mm)</td><td colspan="3">Acceptable number</td></tr>
<tr><td colspan="3">area</td></tr>
<tr><td>A</td><td>B</td><td>C</td></tr>
<tr><td>Φ≤0.1</td><td colspan="2">ignore</td><td rowspan="4">ignore</td></tr>
<tr><td>0.10＜Φ≤0.15</td><td colspan="2">2</td></tr>
<tr><td>0.15＜Φ≤0.25</td><td colspan="2">1</td></tr>
<tr><td>0.25＜Φ</td><td colspan="2">0</td></tr>
</table>
2. Dot (>4.0inch LCD)
<table>
<tr><td rowspan="3">size(mm)</td><td colspan="3">Acceptable number</td></tr>
<tr><td colspan="3">area</td></tr>
<tr><td>A</td><td>B</td><td>C</td></tr>
<tr><td>Φ≤0.15</td><td colspan="2">ignore</td><td rowspan="4">ignore</td></tr>
<tr><td>0.15＜Φ≤0.25</td><td colspan="2">2</td></tr>
<tr><td>0.25＜Φ≤0.35</td><td colspan="2">1</td></tr>
<tr><td>Φ＞0.35</td><td colspan="2">0</td></tr>
</table>
3. Blemish(≤4.0inch on touch panle or between touch panel ane LCD)
<table>
<tr><td rowspan="3">size(mm)</td><td colspan="3">Acceptable number</td></tr>
<tr><td colspan="3">AREA</td></tr>
<tr><td>A</td><td>B</td><td>C</td></tr>
<tr><td>Φ≤0.1</td><td colspan="2">ignore</td><td rowspan="3">ignore</td></tr>
<tr><td>0.10＜Φ≤0.15</td><td colspan="2">1</td></tr>
<tr><td>0.15＜Φ</td><td colspan="2">0</td></tr>
</table>
</td><td>Minor</td></tr>
</table>

<table>
<tr><td></td><td></td><td>4. Blemish(>4.0inch on touch panle or between touch panel ane LCD)
<table>
<tr><td rowspan="3">size(mm)</td><td colspan="3">Acceptable number</td></tr>
<tr><td colspan="3">AREA</td></tr>
<tr><td>A</td><td>B</td><td>C</td></tr>
<tr><td>Φ≤0.15</td><td colspan="2">ignore</td><td rowspan="4">ignore</td></tr>
<tr><td>0.15＜Φ≤0.25</td><td colspan="2">2</td></tr>
<tr><td>0.25＜Φ≤0.35</td><td colspan="2">1</td></tr>
<tr><td>Φ＞0.35</td><td colspan="2">0</td></tr>
</table>
5.line(All inch LCD/touch panle)
<table>
<tr><td colspan="2">size(mm)</td><td colspan="3">Acceptable number</td></tr>
<tr><td rowspan="2">L(length)</td><td rowspan="2">W(width)</td><td colspan="3">area</td></tr>
<tr><td>A</td><td>B</td><td>C</td></tr>
<tr><td>Ignore</td><td>W≤0.02</td><td colspan="2">5</td><td rowspan="4">ignore</td></tr>
<tr><td>L≤3.0</td><td>0.02＜W≤0.03</td><td colspan="2">3</td></tr>
<tr><td>L≤2.0</td><td>0.03＜W≤0.05</td><td colspan="2">2</td></tr>
<tr><td>---</td><td>W＞0.05</td><td colspan="2">Treat with dot</td></tr>
</table></td><td></td></tr>
<tr><td>4</td><td>Stain on LCD panel surface</td><td>Stain which cannot be removed even when wiped lightly with a soft cloth or similar cleaning too are rejectable</td><td>Minor</td></tr>
<tr><td>5</td><td>Rust in bezel</td><td>Rust which is visible in the bezel is rejectable</td><td>Minor</td></tr>
<tr><td>6</td><td>Defect of land surface contact</td><td>Evident crevices which is visble are rejectable</td><td>Minor</td></tr>
<tr><td>7</td><td>Parts mounting</td><td>(1) failure to mount parts
(2) parts not in the specification are mounted
(3) polarith, for example,is reversed</td><td>Major
Major
Major</td></tr>
<tr><td>8</td><td>Parts alignment</td><td>(1) LSI,IC lead width is more than 50% beyond pad outline
(2) Chip component is off center and more than 50% of the leads is off the pad outline</td><td>Minor
Minor</td></tr>
</table>

9	Conductive foreign matter	(1) on open space(gnd,manual solder)solder ball is allowed up toΦ0.1mm(1EA). (2) In case of shield space is allowed up toΦ0.2mm(1EA)	Major
10	Faculty PWB correction	(1) due to PWB copper foil pattern burnout,the patter is connected,using a jumper wire for repair;2 or more places corrected per PWB (2) short circuited part is cut,and no resist coating has been performed.	Minor Minor

area definition

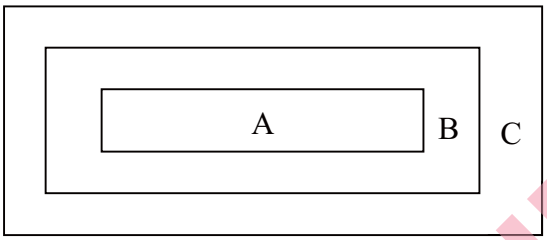

LCD inspection area

A：active area

B：visible area

C：outside of visible area（Invisible area after assembling）

Visible Defect in area c，but it cannot affect product's quality ，it is allowed .

10. Suggestions For Using LCD Modules

10.1 Handling of LCM

10.1.1 The LCD screen is made of glass. Don't give excessive external shock, or drop from a high place.

10.1.2 If the LCD screen is damaged and the liquid crystal leaks out, do not lick and swallow.

When the liquid is attach to your hand, skin, cloth etc, wash it off by using soap and water thoroughly and immediately.

10.1.3 Do not apply excessive force to the display surface or the adjoining areas since this may cause the color tone to vary. Do not touch the display with bare hands. This will stain the display area and degraded insulation between terminals (some cosmetics are determined to the polarizer).

10.1.4 The polarizer covering the display surface of the LCD module is soft and easily scratched. Handle this polarizer carefully. Do not touch, push or rub the exposed polarizers with anything harder than an HB pencil lead (glass, tweezers, etc.). Do not put or attach anything on the display area to avoid leaving marks on it. Condensation on the surface and contact with terminals due to cold will damage, stain or dirty the polarizer. After products are tested at low temperature they must be warmed up in a container before coming in to contact with room temperature air.

10.1.5 If the display surface becomes contaminated, breathe on the surface and gently wipe it with a soft dry cloth. If it is heavily contaminated, moisten cloth with one of the following solvents

- Isopropyl alcohol
- Ethyl alcohol

Do not scrub hard to avoid damaging the display surface.

10.1.6 Solvents other than those above-mentioned may damage the polarizer. Especially, do not use the following.

- Water
- Ketone
- Aromatic solvents

Wipe off saliva or water drops immediately, contact with water over a long period of time may cause deformation or color fading. Avoid contact with oil and fats.

10.1.7 Exercise care to minimize corrosion of the electrode. Corrosion of the electrodes is accelerated by water droplets, moisture condensation or a current flow in a high-humidity environment.

10.1.8 Install the LCD Module by using the mounting holes. When mounting the LCD module make sure it is free of twisting, warping and distortion. In particular, do not forcibly pull or bend the I/O cable or the backlight cable.

10.1.9 Do not attempt to disassemble or process the LCD module.

10.1.10 NC terminal should be open. Do not connect anything.

10.1.11 If the logic circuit power is off, do not apply the input signals.

10.1.12 Electro-Static Discharge Control , Since this module uses a CMOS LSI, the same careful attention should be paid to electrostatic discharge as for an ordinary CMOS IC. To prevent destruction of the elements by static electricity, be careful to maintain an optimum work environment.

- Before removing LCM from its packing case or incorporating it into a set, be sure the module and your body have the same electric potential. Be sure to ground the body when handling the LCD modules.
- Tools required for assembling, such as soldering irons, must be properly grounded. Make certain the AC power source for the soldering iron does not leak. When using an electric screwdriver to attach LCM, the screwdriver should be of ground potentiality to minimize as much as possible any transmission of electromagnetic waves produced sparks coming from the commutator of the motor.

11.Packing (Reference only)

Packing Method

(1)

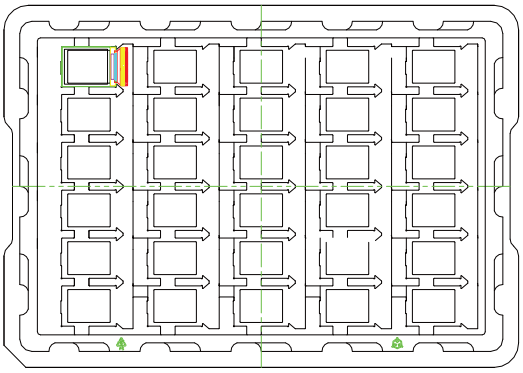

(2)

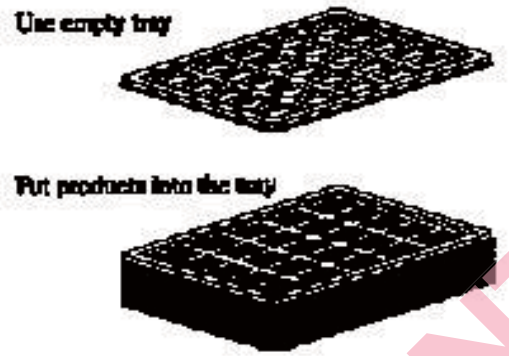

(3)

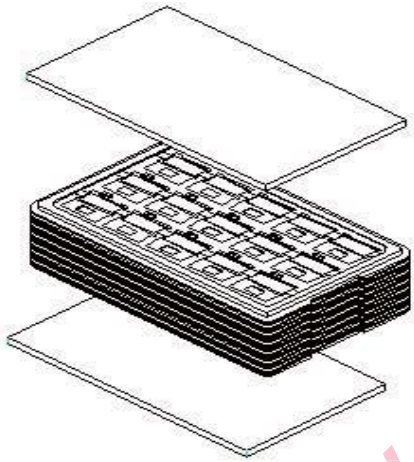

(4)

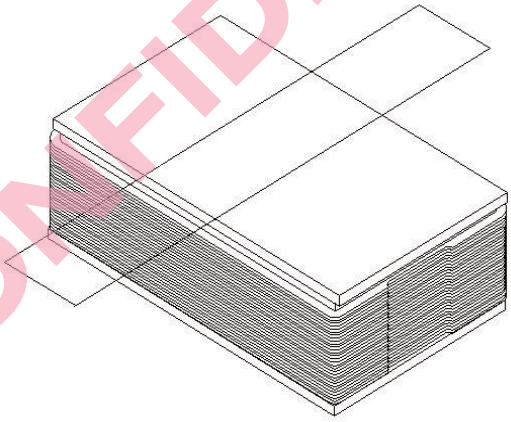

(5)

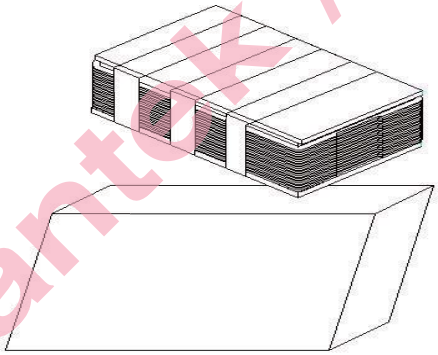

(6)

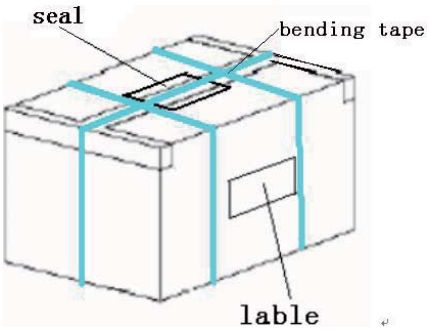

1. Put module into tray cavity:
2. Tray stacking
3. Put 1 cardboard under the tray stack and 1 cardboard above:
4. Fix the cardboard to the tray stack with adhesive tape:
5. Put the tray stack into carton.
6. Carton sealing with adhesive tape.