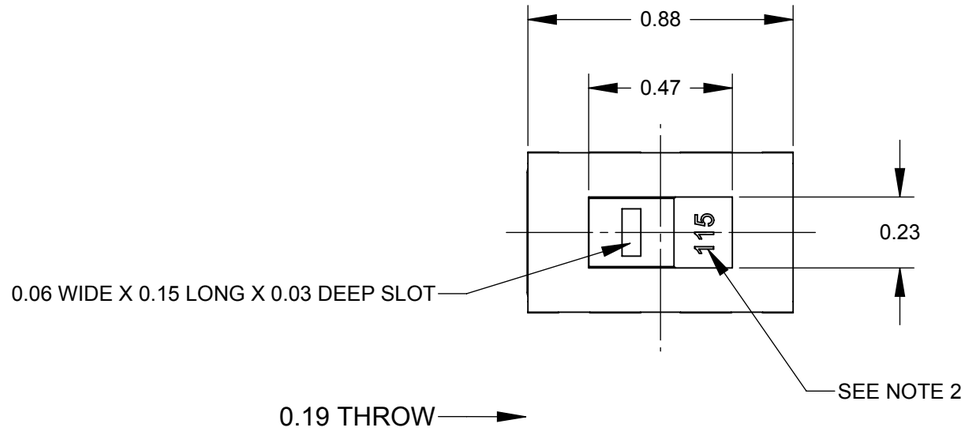

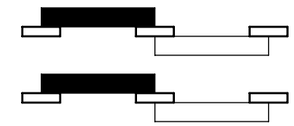

SCHEMATIC
DOUBLE POLE DOUBLE THROW

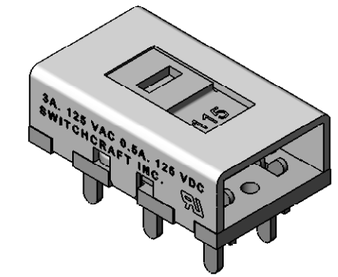

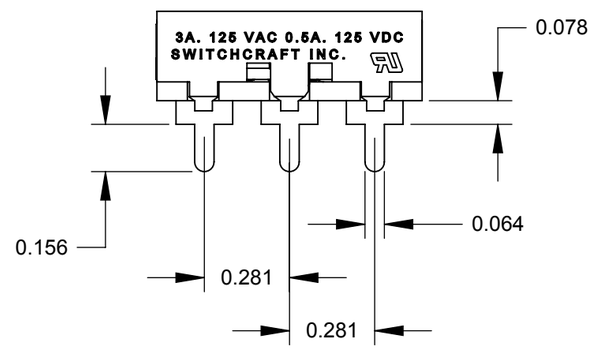

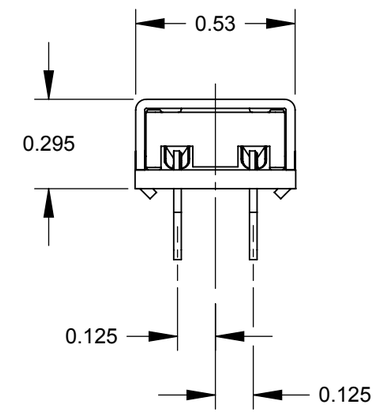

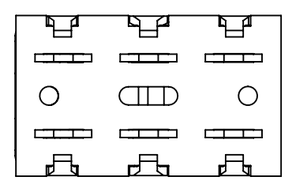

CUSTOMER DRAWING

NOTE:

1. ALL DIMENSIONS REFERENCE UNLESS OTHERWISE SPECIFIED.
2. NUMBERS HOT STAMPED IN WHITE. 230 IS VISIBLE IN OTHER POSITION.
3. MATERIALS
   HOUSING - CRS, ZINC PLATED
   BUTTON - THERMOPLASTIC, BLACK
   TERMINALS & CONTACT SLIDER - COPPER ALLOY, SILVER PLATED
   TERMINAL BOARD - PHENOLIC
4. THIS PRODUCT IS RoHS COMPLIANT.

REV	ECO NUMBER	DATE	BY	APVD
A	26114	8/5/06	RS	TJK

REVISIONS

UNLESS OTHERWISE SPECIFIED
1. ALL DIMENSIONS IN INCHES
- TWO PLACE DECIMALS ±0.02
- THREE PLACE DECIMALS ±0.005

DO NOT SCALE DRAWING

THIS DRAWING DESCRIBES A DESIGN CONSIDERED PROPRIETARY IN NATURE, DEVELOPED AND MANUFACTURED BY SWITCHCRAFT INC. AND IS RELEASED ON A CONFIDENTIAL BASIS FOR IDENTIFICATION PURPOSES ONLY.

SIZE	WIDTH	MULT	LBS/M	TEMPER

FINISH
SPEC No.

MATERIAL
SPEC No.

FIRST USED ON

SCALE 2:1

DATE DRAWN	BY	CHKD	APVD
2/19/09	RS	RS 2/19/09	TJK 2/19/09

Switchcraft®

SHEET 1 OF 1

NAME
SLIDE SWITCH, RoHS

PART No.
C46206LFRX

REV
A

SolidWorks CAD File B