C-1520204

A DWG. SIZE

RAW MATERIAL SPECIFICATION WITH PART NO.

LTR	DESCRIPTION	DWN	APVD
A	REVISED PER ECO-14-013647	NK	RH

1 STAMP LOCATION IS APPROXIMATE ON PART.

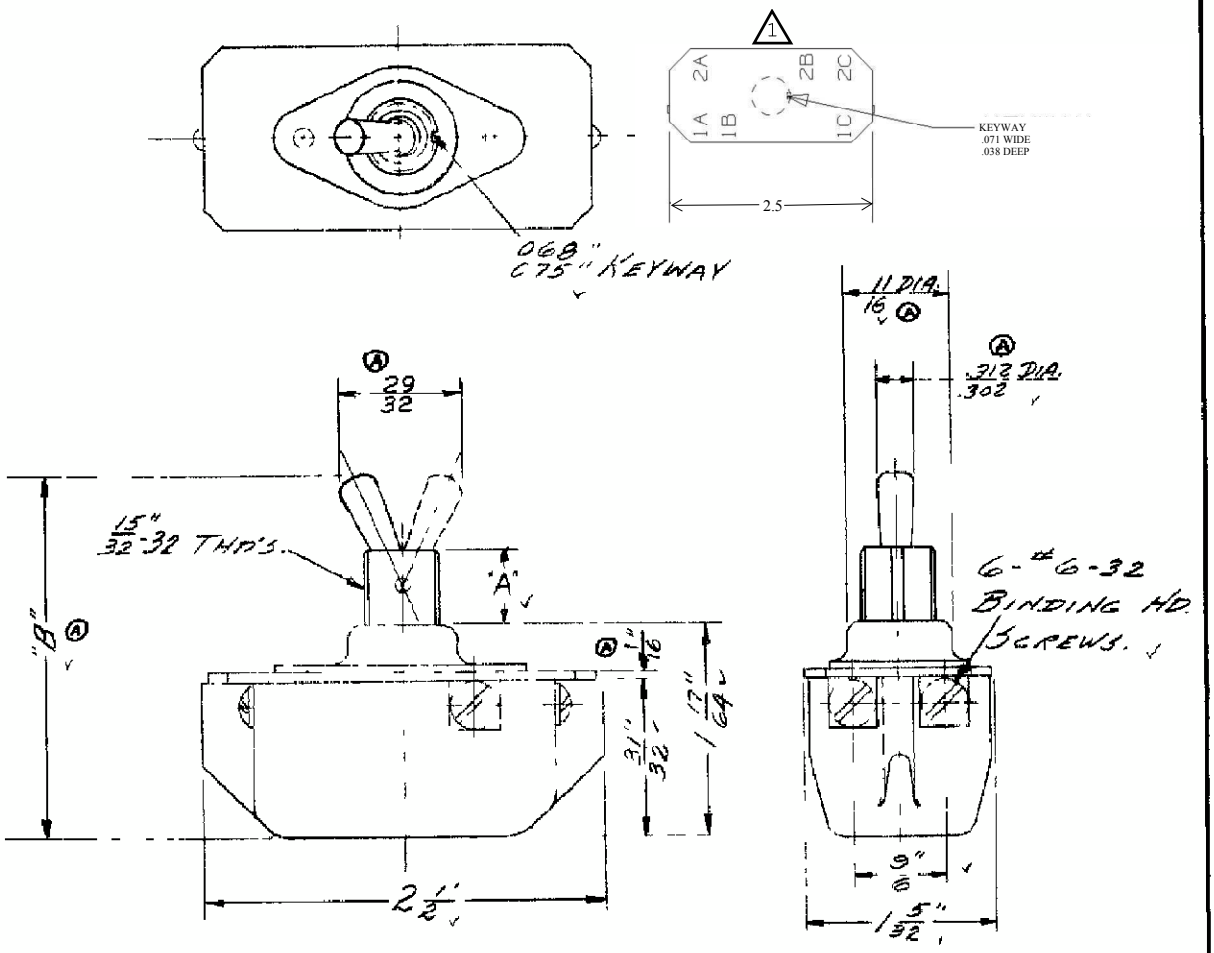

FOR 90-283-2	A = 13/32"	B = 2 35/64
FOR 90-283	A = 11/32"	B = 2 27/64

NAME DIM. FOR D.P.D.T., 10 AMP. ONE HOLE MTG. TOOL HANDLE SW.

ORDER NUMBER	SUPERSEDES	SUPERSEDED	FINISH	FIRST ASSEMBLY WHERE USED
DEV. 3829-10	INTERCHANGEABLE	INTERCHANGEABLE	—	SEE ABOVE

DRAWN BY 3/23/88 TRACED BY CHECKED BY 3/25/88 APPROVED BY 3/26/88

STANDARD TOLERANCES EC-275 APPLY TO DIMENSIONS FOR WHICH TOLERANCES ARE NOT SHOWN

SCALE 1" = 1"

TE Connectivity

A DWG. SIZE C-1520204 REV A

CHARLES BRUNING CO., INC